ELECTRICAL DWGS

MODEL NO: **MTH-9000 (PNB)**
PROJECT NO:
DATE : **22/2/2013**

S/N	DRAWING NO.	DESCRIPTION	REV
1	C3297-CB001	PNB CONTROL PANEL COMPONENT DETAILS	B
2	C3297-CB002	PNB CONTROL PANEL COMPONENT DETAILS	A
3	C3297-CB003	PNB TERMINAL BLOCK DETAILS	C
4	C3297-CB004	PNB LEFT SIDE & RIGHT SIDE I/O & TB	B
5	C3297-CB005	PNB MODULE INPUT SENSOR AND OUTPUT LOCATION	A
6	C3297-CC001	PNB AC POWER INCOMING SUPPLY, NF1, NF2	B
7	C3297-CC002	PNB AC POWER NF3, NF4	B
8	C3297-CC003	PNB AC POWER NF5, NF6	B
9	C3297-CC004	PNB AC POWER NF7, NF8	B
10	C3297-CC005	PNB AC POWER FANS & 3 PIN DOUBLE SOCKET(FOR I2C)	B
11	C3297-CC006	PNB AC POWER M1,M2,M3 SERVO DRIVERS	B
12	C3297-CC007	PNB AC POWER M6,M7,M8 SERVO DRIVERS	B
13	C3297-CC008	PNB AC POWER M11,M12,M13 SERVO DRIVERS	B
14	C3297-CC009	PNB AC POWER M16,M17,M18 SERVO DRIVERS	B
15	C3297-CC010	PNB AC POWER M21,M22,M23 SERVO DRIVERS	B
16	C3297-CC011	PNB DC FUSE CONFIGURATION PS1,DPAC CONTROLLER	C
17	C3297-CC012	PNB DC FUSE CONFIGURATION PS2,STEPPER DRIVER	C
18	C3297-CC013	PNB DC POWER CONTACTOR AND TIMER	B
19	C3297-CC014	PNB DC POWER DPAC AND DOOR SWITCH	B
20	C3297-CC015	PNB DC POWER INPUT/OUTPUT AND MNET J3(M1 TO M5)	C
21	C3297-CC016	PNB DC POWER MNET J3(M6 TO M15)	B
22	C3297-CC017	PNB DC POWER MNET J3(M16 TO M25)	B
23	C3297-CC018	PNB A1 SERVO MOTOR LIMIT SENSORS	C
24	C3297-CC019	PNB A2 SERVO MOTOR LIMIT SENSORS	C
25	C3297-CC020	PNB A3 SERVO MOTOR LIMIT SENSORS	C
26	C3297-CC021	PNB A4 SERVO MOTOR LIMIT SENSORS	C
27	C3297-CC022	PNB A5 SERVO MOTOR LIMIT SENSORS	C
28	C3297-CC023	PNB DC POWER STEPPER MOTOR DRIVER	B
29	C3297-CC024	PNB DC POWER LED LIGHTING	C
30	C3297-CC025	HDMT CONTROL CIRCUIT DOOR SWITCH FOR PNB MODULE	A
31	C3297-CC026	DOOR SWITCH CIRCUIT	A
32	C3297-CF001	M1-PNB A1_M1(Z)	C
33	C3297-CF002	M2-PNB A1_M2(X)	C
34	C3297-CF003	M3-PNB A1_M3(Y)	C
35	C3297-CF004	M4-PNB A1_M4(L)	C
36	C3297-CF005	M5-PNB A1_M5(R)	D
37	C3297-CF006	M6-PNB A2_M1(Z)	C
38	C3297-CF007	M7-PNB A2_M2(X)	C
39	C3297-CF008	M8-PNB A2_M3(Y)	C
40	C3297-CF009	M9-PNB A2_M4(L)	C
41	C3297-CF010	M10-PNB A2_M5(R)	C
42	C3297-CF011	M11-PNB A3_M1(Z)	C

ELECTRICAL DWGS

MODEL NO: **MTH-9000 (PNB)**
PROJECT NO:
DATE : **22/2/2013**

S/N	DRAWING NO.	DESCRIPTION	REV
43	C3297-CF012	M12-PNB A3_M2(X)	C
44	C3297-CF013	M13-PNB A3_M3(Y)	C
45	C3297-CF014	M14-PNB A3_M4(L)	C
46	C3297-CF015	M15-PNB A3_M5(R)	C
47	C3297-CF016	M16-PNB A4_M1(Z)	C
48	C3297-CF017	M17-PNB A4_M2(X)	C
49	C3297-CF018	M18-PNB A4_M3(Y)	C
50	C3297-CF019	M19-PNB A4_M4(L)	C
51	C3297-CF020	M20-PNB A4_M5(R)	C
52	C3297-CF021	M21-PNB A5_M1(Z)	C
53	C3297-CF022	M22-PNB A5_M2(X)	C
54	C3297-CF023	M23-PNB A5_M3(Y)	C
55	C3297-CF024	M24-PNB A5_M4(L)	C
56	C3297-CF025	M25-PNB A5_M4(R)	C
57	C3297-CF026	PNB A1 LIMIT SENSORS	C
58	C3297-CF027	PNB A2 LIMIT SENSORS	C
59	C3297-CF028	PNB A3 LIMIT SENSORS	C
60	C3297-CF029	PNB A4 LIMIT SENSORS	C
61	C3297-CF030	PNB A5 LIMIT SENSORS	C
62	C3297-CH001	PNEUMATIC CIRCUIT AIR SERVICE UNIT	A
63	C3297-CH002	PNEUMATIC CIRCUIT MAINFOLD 1&2,PNB 1 VALVE	A
64	C3297-CH003	PNEUMATIC CIRCUIT MAINFOLD 3&4,PNB 2 VALVE	A
65	C3297-CH004	PNEUMATIC CIRCUIT MAINFOLD 5&6,PNB 3 VALVE	A
66	C3297-CH005	PNEUMATIC CIRCUIT MAINFOLD 7&8,PNB 4 VALVE	A
67	C3297-CH006	PNEUMATIC CIRCUIT MAILFOLD 9 & 10,PNB 5 VALVE	A
68	C3297-CI001	PNB - DPAQ HSL	B
69	C3297-CI002	DPAC MOTION NET PNB A1, PNB A2	A
70	C3297-CI003	DPAC MOTION NET PNB A3, PNB A4	A
71	C3297-CI004	MOTION NET PNB A5 DPAC TO MNET NETWORK CABLE	C
72	C3297-CI005	PNB-IP01 WIRING	B
73	C3297-CI006	PNB-OP03 WIRING	B
74	C3297-CI007	PNB-IP02 WIRING	A
75	C3297-CI008	PNB-OP04 WIRING	A
76	C3297-CI009	PNB-IP03 WIRING	A
77	C3297-CI010	PNB-OP05 WIRING	A
78	C3297-CI011	PNB-IP04 WIRING	A
79	C3297-CI012	PNB-OP06 WIRING	A
80	C3297-CI013	PNB-IP05 WIRING	A
81	C3297-CI014	PNB-OP07 WIRING	A
82	C3297-CI015	PNB-IP06 WIRING	A
83	C3297-CI016	PNB-OP08 WIRING	A
84	C3297-CI017	PNB-IP07 WIRING	A
85	C3297-CI018	PNB-OP09 WIRING	A

ELECTRICAL DWGS

MODEL NO: **MTH-9000 (PNB)**
PROJECT NO:
DATE : **22/2/2013**

S/N	DRAWING NO.	DESCRIPTION	REV
86	C3297-CI019	PNB-IP08 WIRING	A
87	C3297-CI020	PNB-OP10 WIRING	A
88	C3297-CI021	PNB-IP09 WIRING	A
89	C3297-CI022	PNB-OP11 WIRING	A
90	C3297-CI023	PNB-IP10 WIRING	B
91	C3297-CI024	PNB-OP12 WIRING	A
92	C3297-CI025	PRESSURE SENSOR CONTROLLER WIRING	B
93	C3297-CI026	I2C WIRING	A
94	C3297-CI027	I2C CABLE CONNECT PNB TO TESTER COLUMN	A
95	C3297-CI028	I2C BUS TO RS232 WIRING	A
96	C3297-CI029	I2C CABLE CONFIGURATION	A
97	C3297-CI030	I2C BUS TO RS232 WIRING	A

All rights are reserved. Reproduction i
whole or in part is prohibited without
the written consent of the copyright owner.

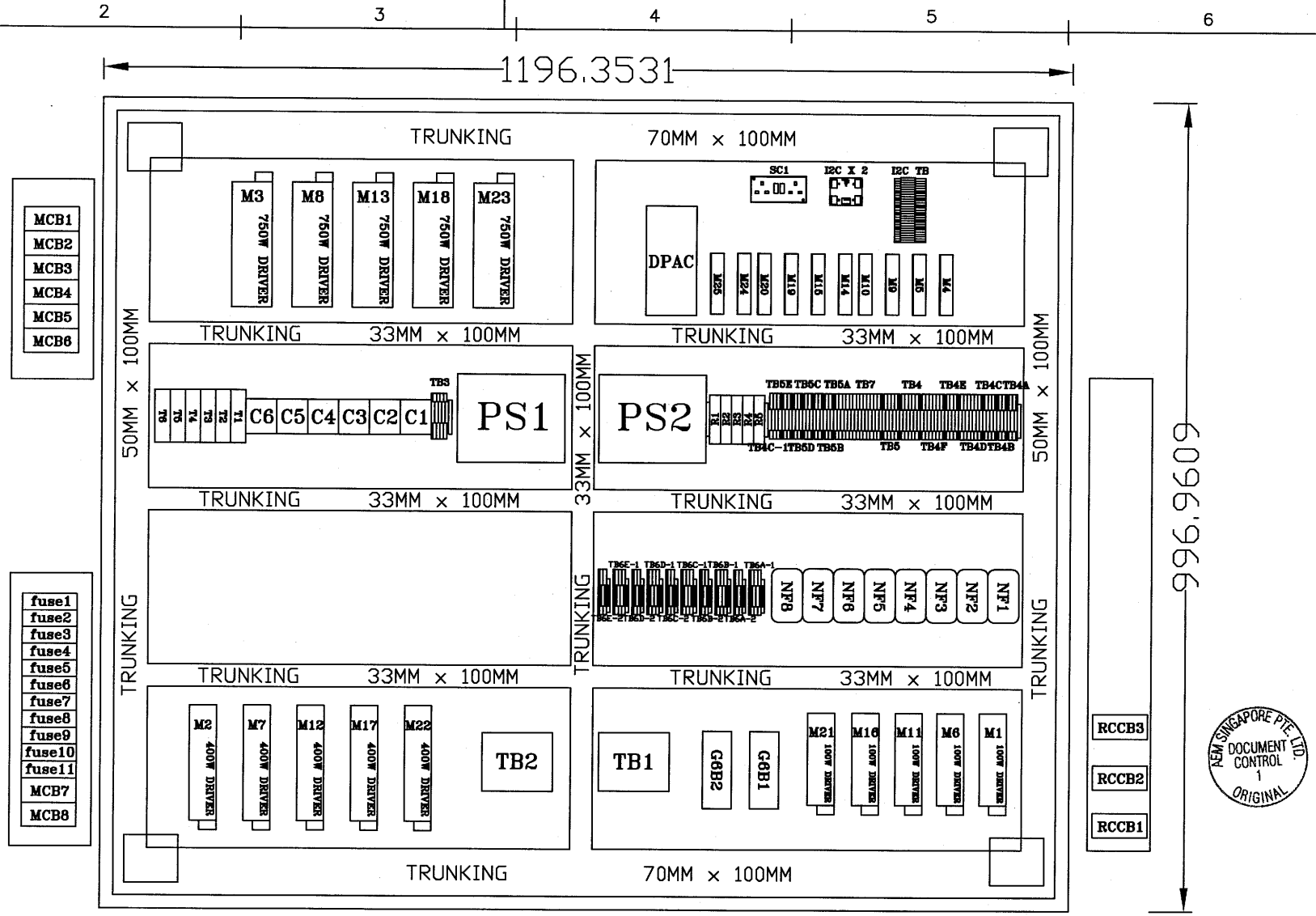

AEM	TITLE: PNB CONTROL PANEL COMPONENT DETAILS	DRAWING NO: C3297-CB001	B 18.10.2011
DRAWN : SAI THURA AUNG	DATE : 18.10.2011	SH 2 – 4	DATA FMT: AUTOCAD DWG
DESIGNED : SAI THURA AUNG	DATE : 18.10.2011	FILE : C3297-CB001_RevA	
CHECKED : KELLY THEAN	DATE :	Property of EDM Department – AEM–Evertech	

All rights are reserved. Reproduction i
whole or in part is prohibited without
the written consent of the copyright owner.

EIN NO	ABBRE.	DESCRIPTION
EAC02664	MSW	63A, 6 POLES MAIN SWITCH
EPL410	DPAC	DPAC-3200-11, CONTROLLER
CMO941	M3, M8, M13, M18, M23	750 W SERVO AMPLIFIER
CMO940	M2, M7, M12, M17, M22	400 W SERVO AMPLIFIER
CMO939	M1, M6, M11, M16, M21	100 W SERVO AMPLIFIER
CMO533	M4, M5, M9, M10 M14, M15, M19, M20 M24, M25	MYCOM 24VDC STEPPER DRIVER
ERC165	MCB1, MCB2, MCB3	24335, C60N 2P C6, 6A MCB
ERC836	MCB4, MCB5, MCB6 MCB7, MCB8	C60N 2P 16A C CURVE 10KA
ERC234	RCCB1,RCCB2, RCCB3,RCCB4 RCCB5,RCCB6, RCCB7	MG 40/2/0.3(16204S), 2P ELCP 40/0.3A
EAC018	NF1, NF2, NF3, NF4 NF5, NF6, NF7, NF8	ZAC2220-00U, NOISE FILTER 250VAC 20A
ERC047	R1, R2, R3, R4, R5	MY4NJ 24VDC RELAY (2-POLE)
ERC059		RELAY SOCKET (2-POLE)
EPS078	PS1, PS2	QUINT-PS-100-240AC/24DC/20
ERC368	C1,C2,C3,C4,C5,C6	MAGNETIC CONTACTOR DC24V COIL VOLTAGE
ERC332	T1,T2,T3,T4,T5,T6	CT-ERE TIMER, UC24V, 220-240VAC, 0.3-30S
EAC01400	TB1, TB2	048 86 DISTRIBUTION BLOCK (125A) 4 POLE
EAC01402		Ground Distribution block 1P (125A) 1-pole
EAC054	PE2, PE3	10 WAY EARTH LINK
EAC968	TB4,TB5,TB6,TB3,TB8 TB9,TB10,TB11	2 LEVEL TERMINAL BLOCK
EPL411	IP05/OP05	HSL-DI16DO16-UD-NN
EAC968	TB6, IO/OP TB	2 LEVEL TERMINAL BLOCK

AEM SINGAPORE PTE LTD.
DOCUMENT CONTROL
3
ORIGINAL

AEM	TITLE: PNB CONTROL PANEL COMPONENT DETAILS	DRAWING NO: C3297-CB002	A 01.06.2009
DRAWN : JACINTO	DATE : 01.06.2009	SH 2 – 4	DATA FMT: AUTOCAD DWG
DESIGNED : SIM YONG SING	DATE : 01.06.2009	FILE : C3297-CB001_RevA	
CHECKED : GARY NG	DATE :	Property of EDM Department – AEM–Evertech	

All rights are reserved. Reproduction whole or in part is prohibited without the written consent of the copyright owner.

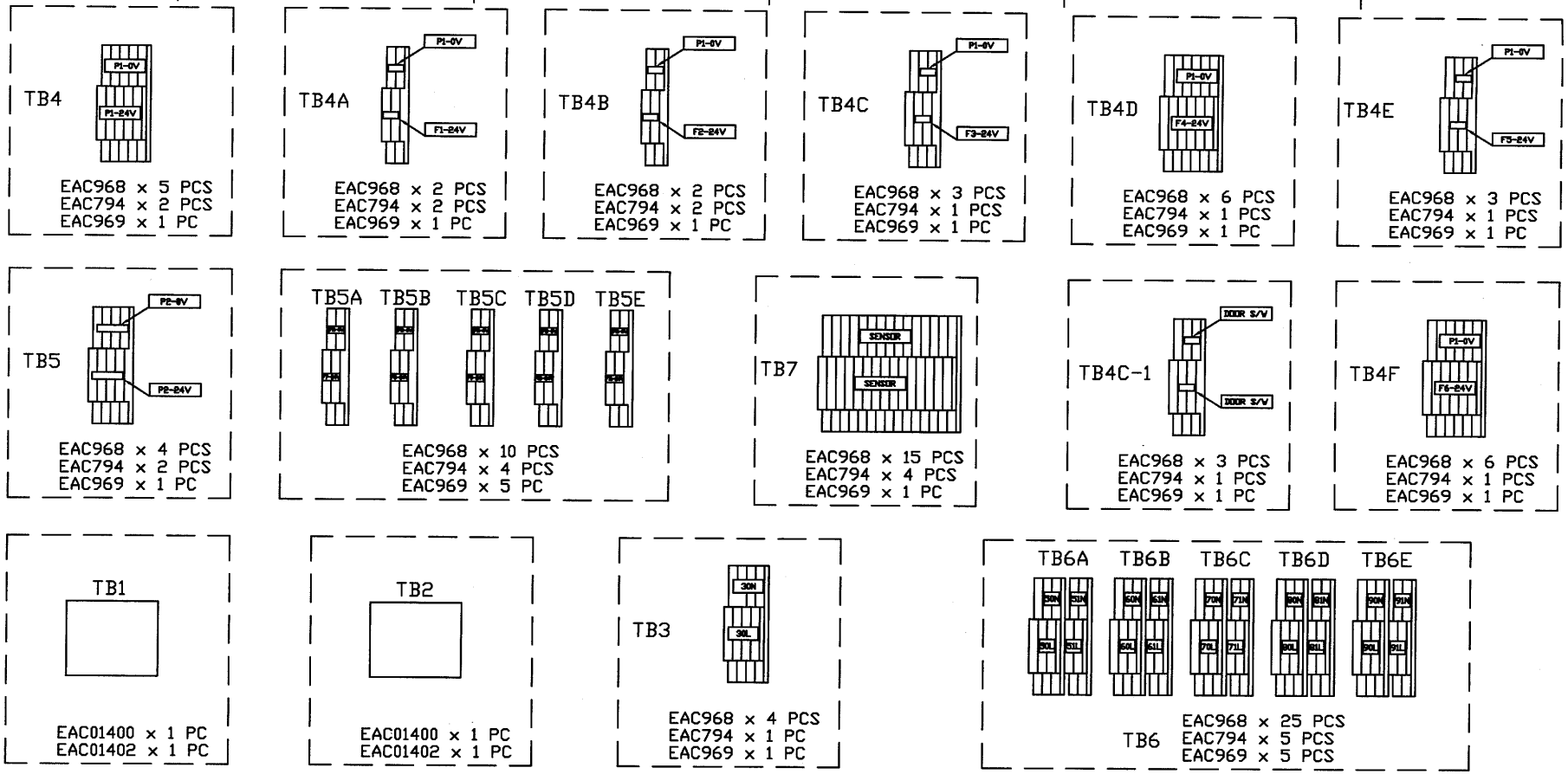

AEM SINGAPORE PTE. LTD. DOCUMENT CONTROL 2 ORIGINAL

AEM	TITLE: PNB TERMINAL BLOCK DETAILS	DRAWING NO: C3297-CB003	C 16.10.2012
DRAWN : SAI THURA AUNG	DATE : 16.10.2012	SH 3 – 6	DATA FMT: AUTOCAD DWG
DESIGNED : SAI THURA AUNG	DATE : 16.10.2012	FILE : C3297-CB001_RevC	
CHECKED : HAN BIN	DATE : 07/11/2012	Property of EDM Department – AEM–Evertech	

All rights are reserved. Reproduction in whole or in part is prohibited without the written consent of the copyright owner.

LEFT SIDE PNB

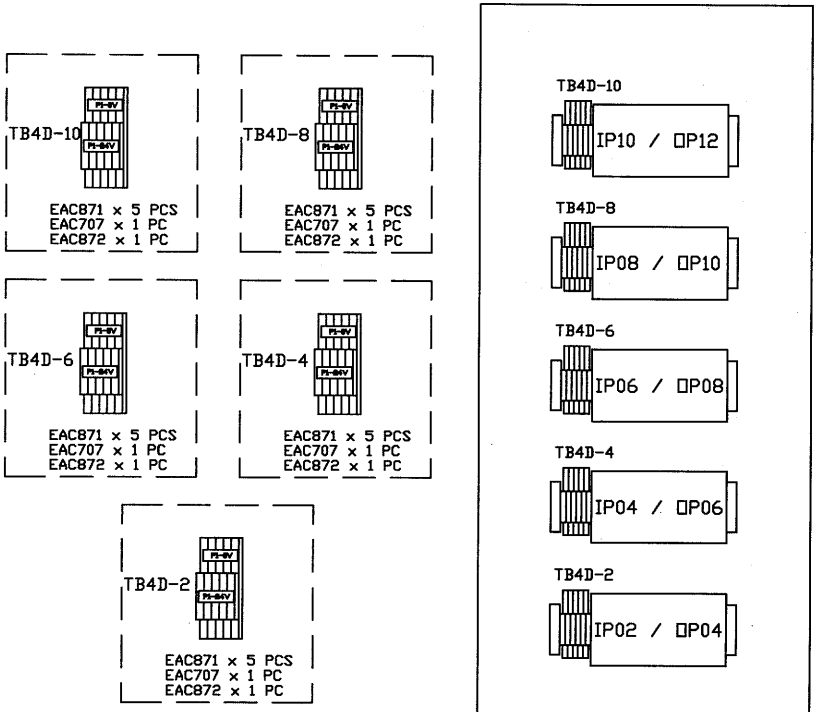

RIGHT SIDE PNB

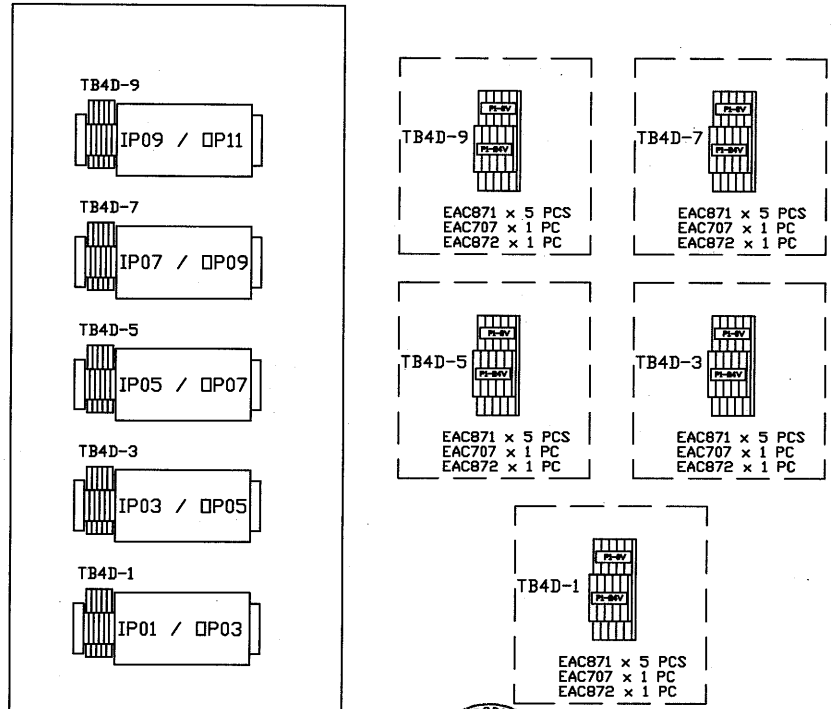

AEM SINGAPORE PTE LTD. DOCUMENT CONTROL 1 ORIGINAL

EAC871 x 50 PCS
EAC872 x 10 PCS
EAC707 x 10 PCS

AEM	TITLE: PNB LEFT SIDE AND RIGHT SIDE I/□ AND TB	DRAWING NO: C3297-CB004	B 18.10.2011
DRAWN : SAI THURA AUNG	DATE : 18.10.2011	SH 4 – 4	DATA FMT: AUTOCAD DWG
DESIGNED : SAI THURA AUNG	DATE : 18.10.2011	FILE : C3297-CB001_RevB	
CHECKED : KELLY THEAN	DATE :	Property of EDM Department – AEM–Evertech	

EPL411	IP/□P	HSL-DI16D□16-UD-NN

All rights are reserved. Reproduction in whole or in part is prohibited without the written consent of the copyright owner.

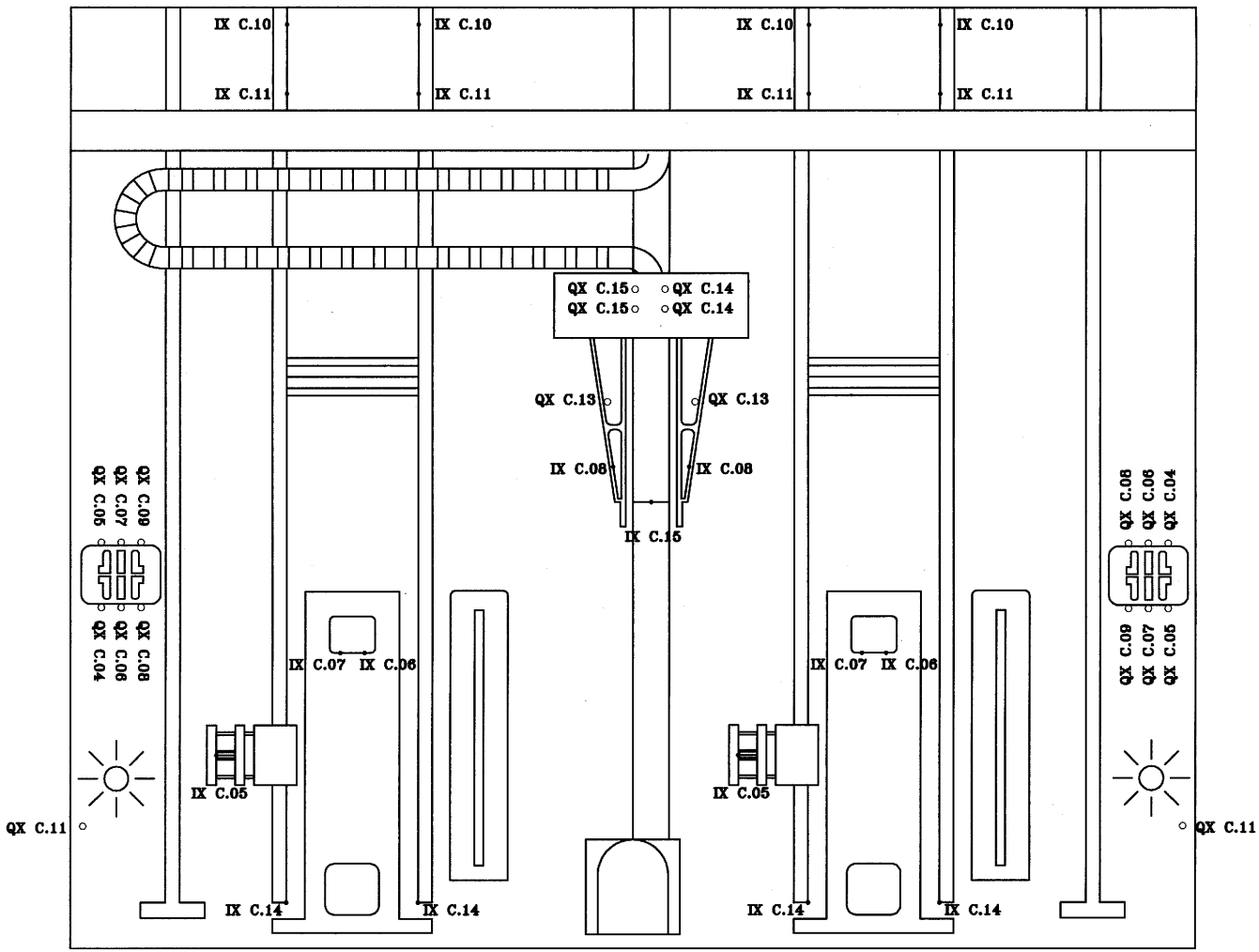

C = Cell 1 to 10

10	9
8	7
6	5
4	3
2	1

C = Output ID 3 to 12

QX 12	QX 11
QX 10	QX 9
QX 8	QX 7
QX 6	QX 5
QX 4	QX 3

AEM SINGAPORE PTE LTD. DOCUMENT CONTROL 3 ORIGINAL

AEM	TITLE: PNB MODULE INPUT SENSOR AND OUTPUT LOCATION	DRAWING NO: C3297-CB005	A 19/4/2010
DRAWN : SAI THURA AUNG	DATE : 19/4/2010	SH 5 – 5	DATA FMT: AUTOCAD DWG
DESIGNED : SAI THURA AUNG	DATE : 19/4/2010	FILE : C3297-CB001_RevA	
CHECKED : HP WONG	DATE :	Property of EDM Department – AEM–Evertech	

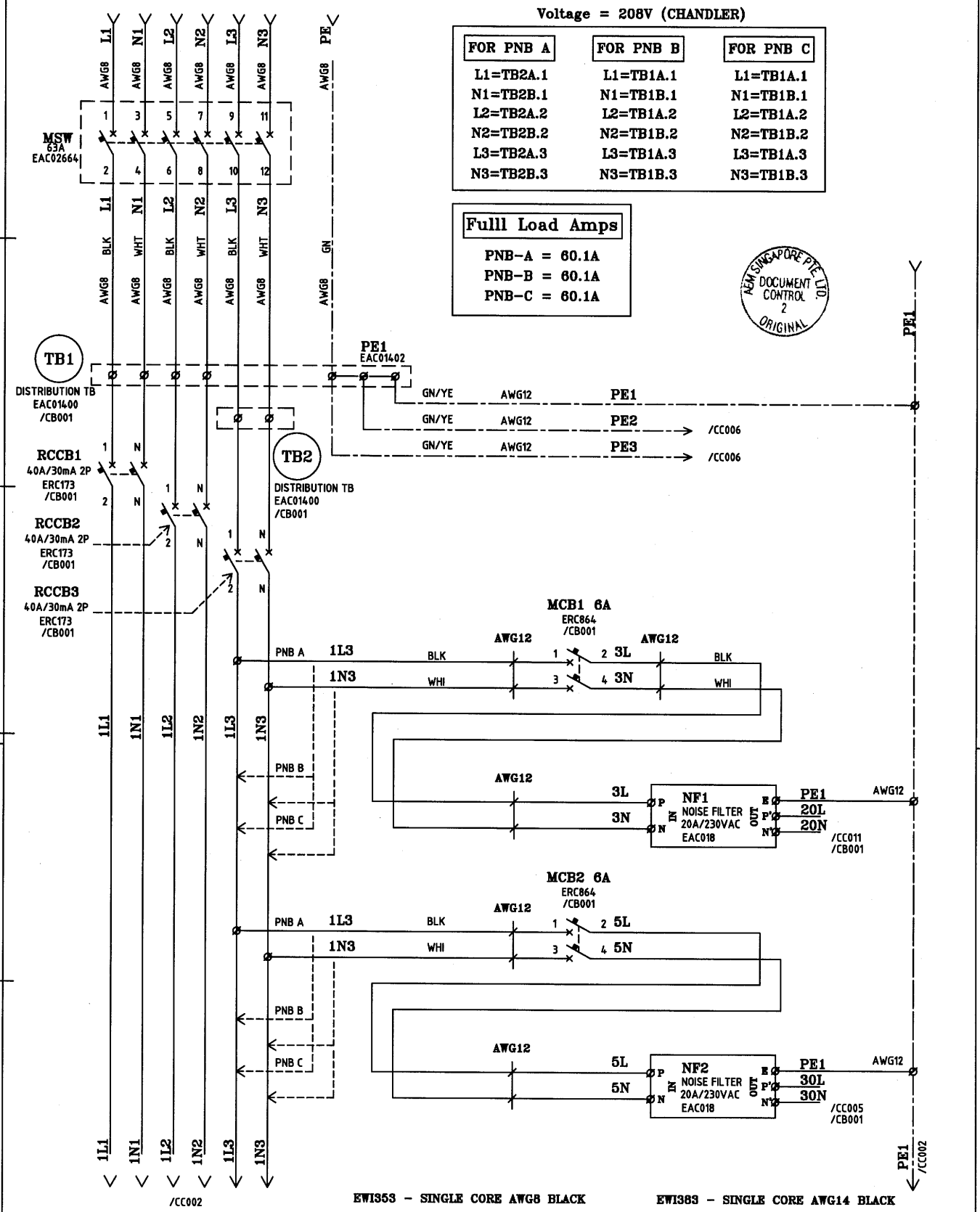

All rights are reserved. Reproduction in whole or in part is prohibited without the written consent of the copyright owner.

AEM	TITLE: PNB AC POWER INCOMING SUPPLY, NF1, NF2	DRAWING NO: C3297-CC001	B 16.10.2012
DRAWN : SAI THURA AUNG	DATE : 16.10.2012	SH 1 –26	DATA FMT: AUTOCAD DWG
DESIGNED : SAI THURA AUNG	DATE : 16.10.2012	FILE : C3297-CC001_RevB	
CHECKED : HAN BIN	DATE : 07/11/2012	Property of EDM Department – AEM–Evertech	

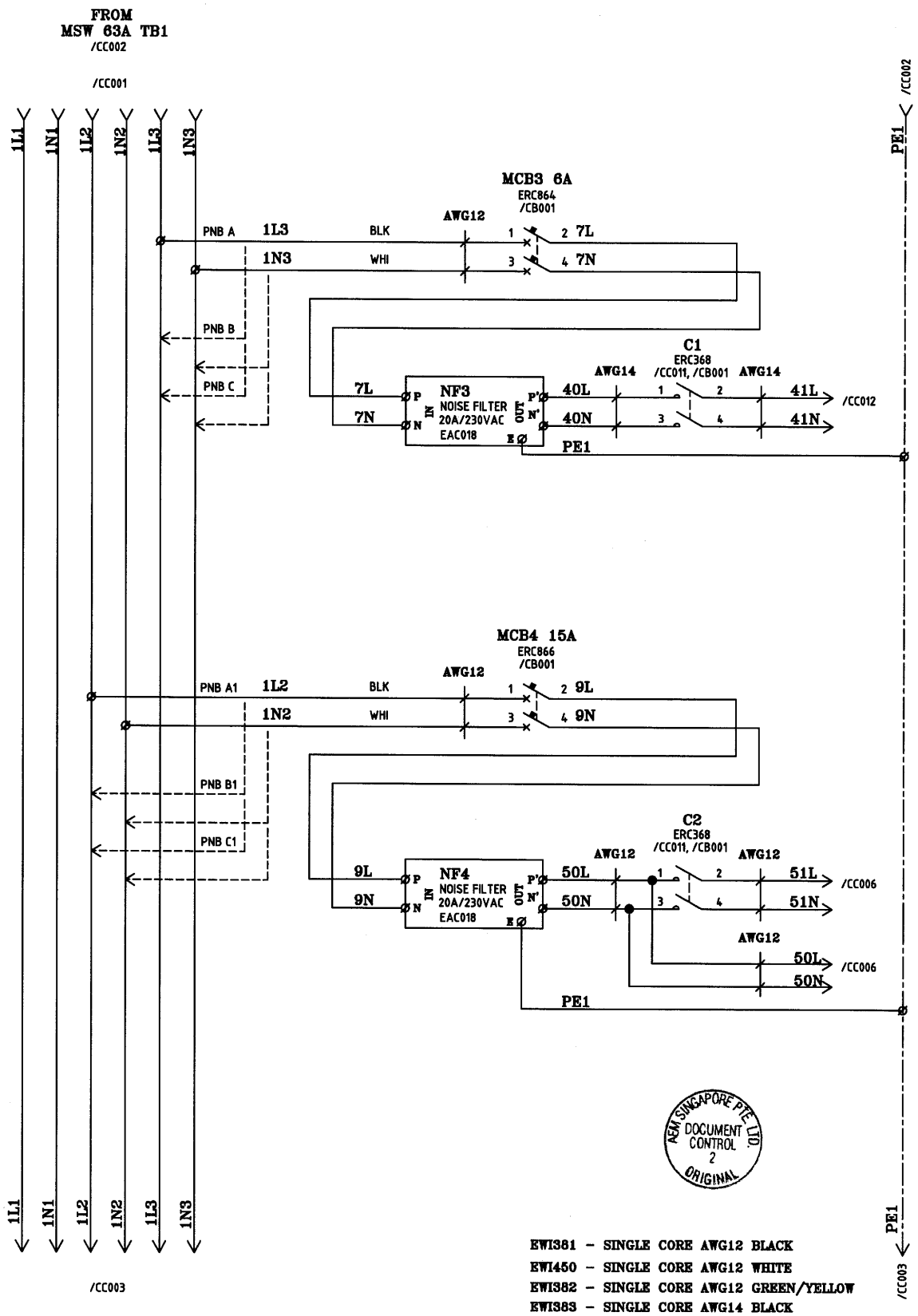

EWI381 – SINGLE CORE AWG12 BLACK
EWI450 – SINGLE CORE AWG12 WHITE
EWI382 – SINGLE CORE AWG12 GREEN/YELLOW
EWI383 – SINGLE CORE AWG14 BLACK
EWI451 – SINGLE CORE AWG14 WHITE
EWI384 – SINGLE CORE AWG14 GREEN/YELLOW
EWI385 – SINGLE CORE AWG16 BLACK
EWI452 – SINGLE CORE AWG16 WHITE
EWI386 – SINGLE CORE AWG16 GREEN/YELLOW

xxL – COLOUR IN BLACK
xxN – COLOUR IN WHITE
PE – COLOUR IN GN/YE
PE1 – COLOUR IN GN/YE

AEM SINGAPORE PTE LTD. DOCUMENT CONTROL 2 ORIGINAL

All rights are reserved. Reproduction in whole or in part is prohibited without the written consent of the copyright owner.

AEM	TITLE: PNB AC POWER NF3, NF4	DRAWING NO: C3297-CC002	B 16.10.2012
DRAWN : SAI THURA AUNG	DATE : 16.10.2012	SH 2 –24	DATA FMT: AUTOCAD DWG
DESIGNED : SAI THURA AUNG	DATE : 16.10.2012	FILE : C3297-CC002_RevB	
CHECKED : HAN BIN	DATE : 07/11/2012	Property of EDM Department – AEM–Evertech	

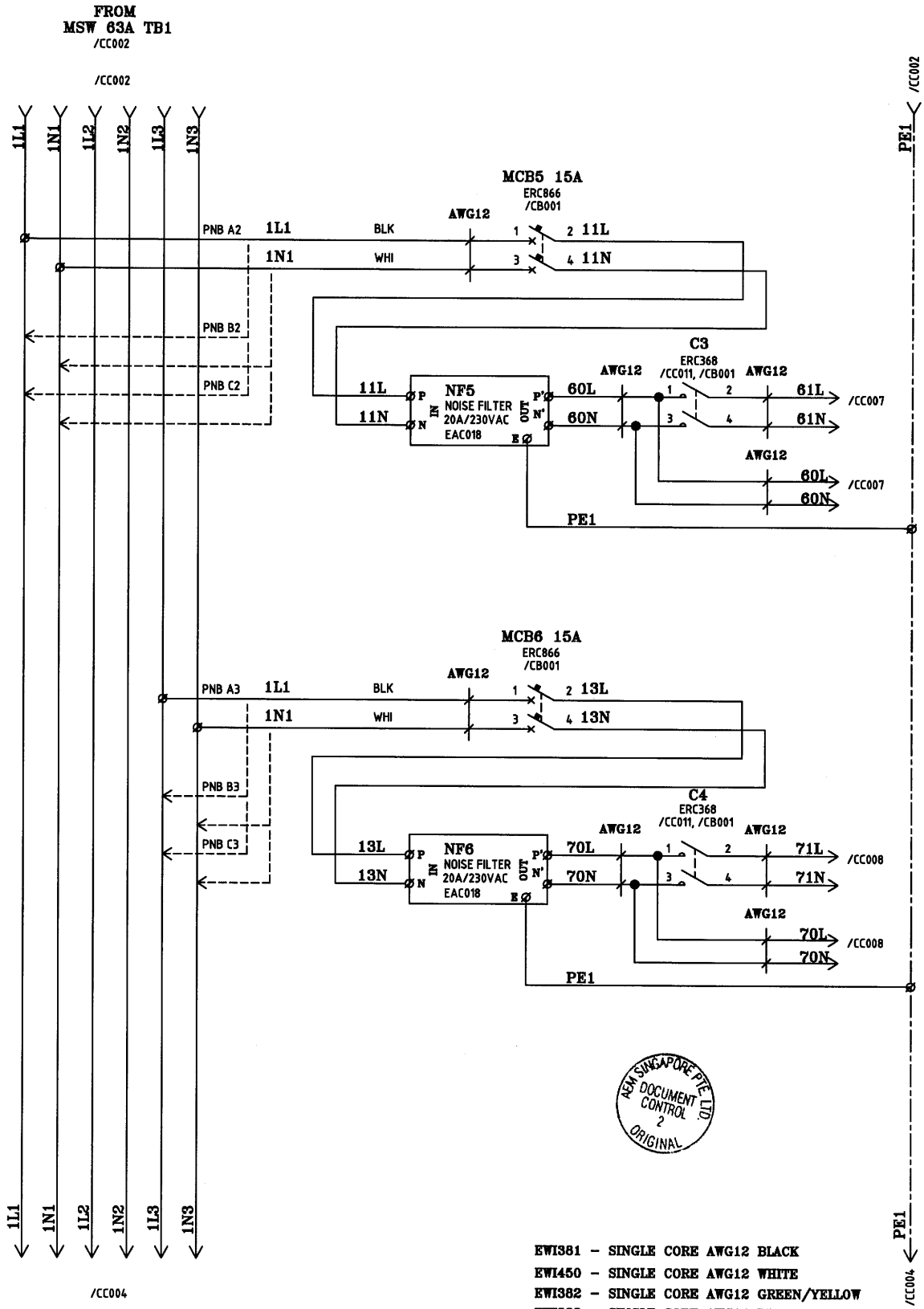

AEM SINGAPORE PTE LTD. DOCUMENT CONTROL 2 ORIGINAL

EWI381 – SINGLE CORE AWG12 BLACK
EWI450 – SINGLE CORE AWG12 WHITE
EWI382 – SINGLE CORE AWG12 GREEN/YELLOW
EWI383 – SINGLE CORE AWG14 BLACK
EWI451 – SINGLE CORE AWG14 WHITE
EWI384 – SINGLE CORE AWG14 GREEN/YELLOW
EWI385 – SINGLE CORE AWG16 BLACK
EWI452 – SINGLE CORE AWG16 WHITE
EWI386 – SINGLE CORE AWG16 GREEN/YELLOW

xxL – COLOUR IN BLACK
xxN – COLOUR IN WHITE
PE – COLOUR IN GN/YE
PE1 – COLOUR IN GN/YE

All rights are reserved. Reproduction in whole or in part is prohibited without the written consent of the copyright owner.

AEM	TITLE: PNB AC POWER NF5, NF6	DRAWING NO: C3297-CC003	B	16.10.2012
DRAWN : SAI THURA AUNG	DATE : 16.10.2012	SH 3 –24	DATA FMT: AUTOCAD DWG	
DESIGNED : SAI THURA AUNG	DATE : 16.10.2012	FILE : C3297-CC003_RevB		
CHECKED : HAN BIN	DATE : 07/11/2012	Property of EDM Department – AEM–Evertech		

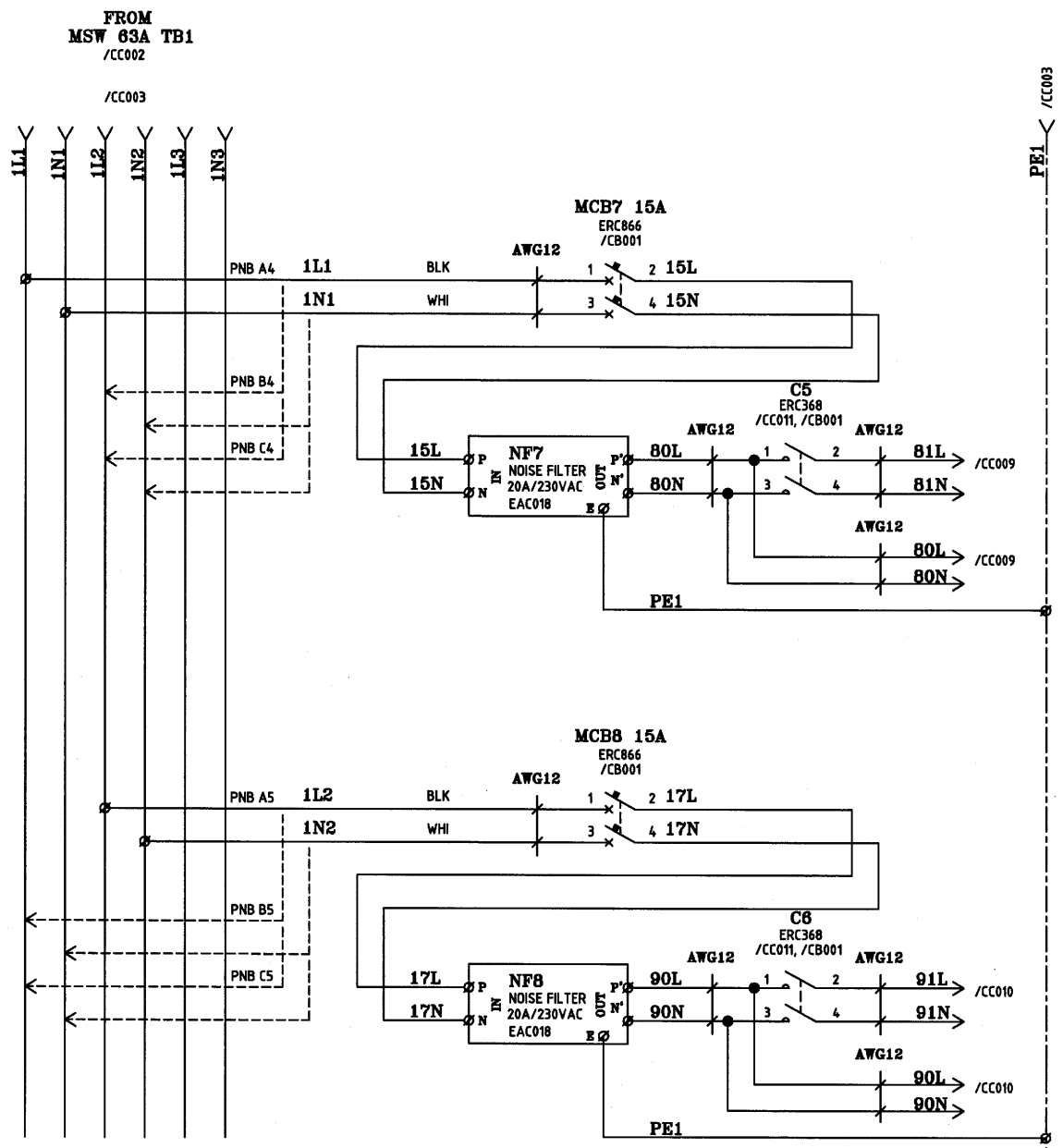

AEM SINGAPORE PTE. LTD.
DOCUMENT CONTROL
2
ORIGINAL

EWI381 – SINGLE CORE AWG12 BLACK
EWI450 – SINGLE CORE AWG12 WHITE
EWI382 – SINGLE CORE AWG12 GREEN/YELLOW
EWI383 – SINGLE CORE AWG14 BLACK
EWI451 – SINGLE CORE AWG14 WHITE
EWI384 – SINGLE CORE AWG14 GREEN/YELLOW
EWI385 – SINGLE CORE AWG16 BLACK
EWI452 – SINGLE CORE AWG16 WHITE
EWI386 – SINGLE CORE AWG16 GREEN/YELLOW

xxL – COLOUR IN BLACK
xxN – COLOUR IN WHITE
PE – COLOUR IN GN/YE
PE1 – COLOUR IN GN/YE

All rights are reserved. Reproduction in whole or in part is prohibited without the written consent of the copyright owner.

AEM	TITLE: PNB AC POWER NF7, NF8		DRAWING NO: C3297-CC004	B 16.10.2012
DRAWN : SAI THURA AUNG		DATE : 16.10.2012	SH 4 –24	DATA FMT: AUTOCAD DWG
DESIGNED : SAI THURA AUNG		DATE : 16.10.2012	FILE : C3297-CC004_RevB	
CHECKED : HAN BIN		DATE : 07/11/2012	Property of EDM Department – AEM–Evertech	